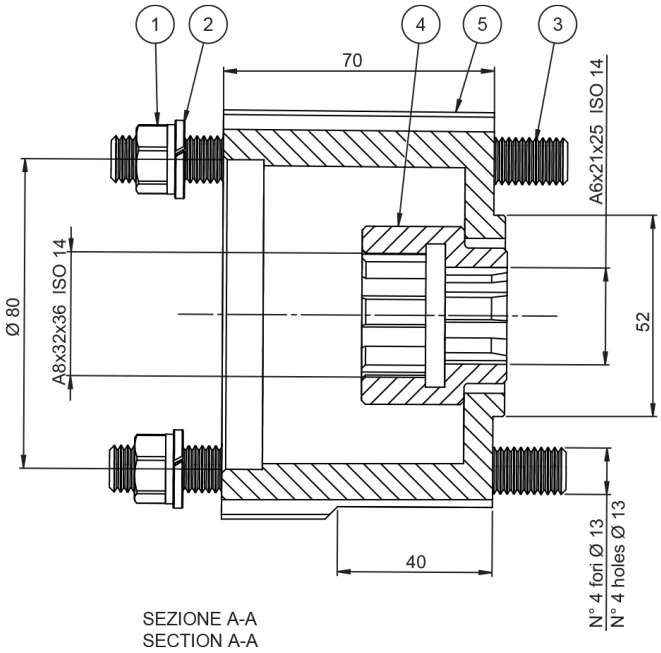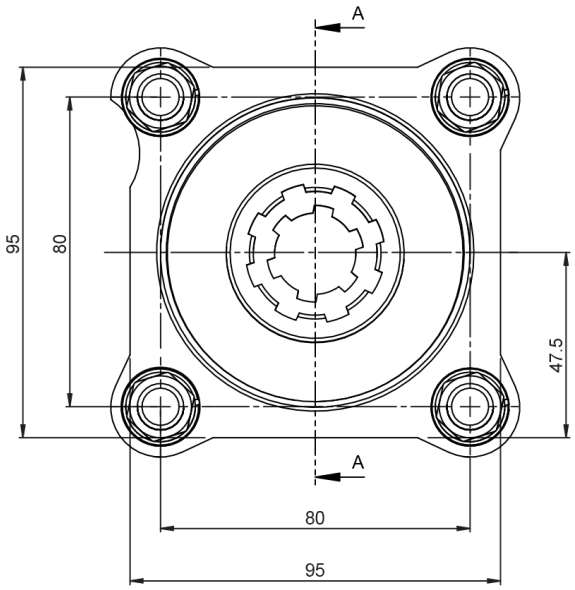Shaft kit
205X4850000